PRODUCT INFO

SW3A003

SP3T Absorptive Switch
2GHz to 18GHz

RF for RF Engineers

Description:

Amplical's SW3A003 SP3T broadband coaxial absorptive PIN diode switch features low insertion loss, low vswr, high isolation and fast switching speed. Internal 50Ω terminations are provided on J1 through J3 ports when switched in the isolation (off) state. RF ports incorporate DC blocks. An on-board TTL-compatible driver provides convenient logic control. The switch operates from +5V DC and a negative DC supply ranging from −12V to −20V. The compact design incorporates SMA female connectors. Two ø0.096 through holes are provided for convenient chassis mounting.

Specifications:

Parameter	Specification
Frequency Range	2 GHz to 18 GHz minimum
Insertion Loss	2.9 dB maximum
VSWR (J0 through J3 on; J1 through J3 off)	1.9:1 maximum (50Ω)
Isolation (port-to-port and input-to-output)	70 dB minimum (above insertion loss)
Switching Speed: T_{ON} (50%TTL to 90%RF)	75 nsec maximum
Switching Speed: T_{OFF} (50%TTL to 10%RF)	45 nsec maximum
Switching Speed: T_{RISE} (10%RF to 90%RF)	25 nsec maximum
Switching Speed: T_{FALL} (90%RF to 10%RF)	15 nsec maximum
RF Power, Operating	+27 dBm maximum
OIP3	+45 dBm minimum
OIP2	+75 dBm minimum
Control Logic	TTL 0: Insertion Loss; TTL 1: Isolation
DC Supplies	+5.0 ± 0.3V @ 110mA maximum
	-12.0 to -20.0V @ 40mA maximum
RF Connectors	SMA Female per MIL-PRF-39012
DC and Logic Control Ports	ø0.030" x 0.20" long solder pin
Operating Temperature	-55°C to +85°C
Storage Temperature	-65°C to +125°C
Enclosure Finish	Albaloy
Lead Finish	Gold Plate per MIL-G-45204
Weight	37 grams maximum
Mechanical	See Figure 1

Logic control pin function:

E1 controls J1 to J0 path
E2 controls J2 to J0 path
E3 controls J3 to J0 path

Applications:

- Communications Systems
- Electronic Simulators
- Bypass/Selector Switch
- Test Equipment
- Radar Systems
- EW Systems

Custom Options:

- Hermetic Seal
- Alternate DC operating voltage supplies
- MIL / Hi-Rel Screening
- Band-specific performance optimization
- Port-to-port phase and amplitude matching
- Unit-to-unit phase and amplitude matching
- Alternate input port locations
- Reverse control logic
- BCD control logic

Figure 1 Mechanical Outline:

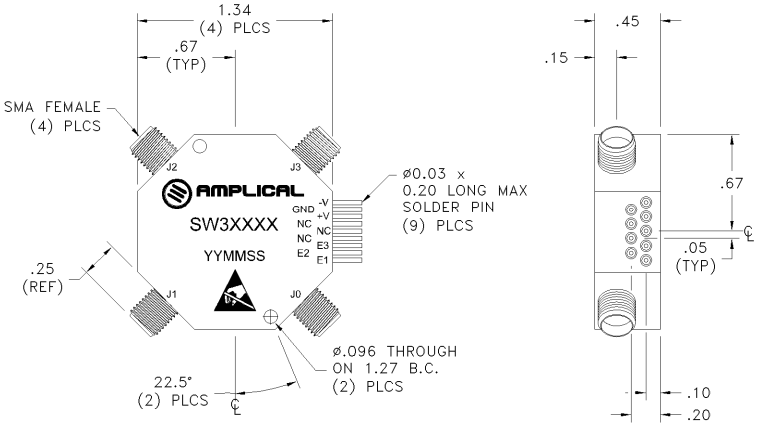

Outline drawing notes:

1. Drawing not to scale
2. Dimensions in inches
3. Tolerance: x.xx = ±0.020, x.xxx = ±0.010
4. J0: RF common

Customization:

Amplical offers complete customization of any electrical or mechanical parameter for any product. All models are available with hermetic seal and complete MIL screening. Contact the factory to discuss your specific requirements

About Amplical Corporation:

Amplical is a leading supplier of high quality RF and Microwave components. Utilizing state of the art design and manufacturing techniques, Amplical focuses on producing high performance amplifiers, switches, modulators, attenuators, phase shifters and limiters at affordable prices. Amplical serves the defense, aerospace, communications, test and instrumentation markets.

Disclaimer:

Specifications subject to change without notice. Contact the factory prior to placing an order to assure you have the most up to date product specification.

AMPLICAL
20 Troy Road
Whippany, NJ 07981

© 2018 Amplical Corporation

Phone: 973-386-1119
Fax: 973-386-1131
E-mail: info@amplical.com
web: www.amplical.com